KMK761000M

45cm CombiQuick Combi Microwave Oven

Features

- IsoFront™ - A genuine cooler door
- SoftMotion™ hinges
- Anti-fingerprint stainless steel
- Touch on glass controls
- Quick start function
- Function control lock
- Automatic weight defrost program
- Automatic weight cook program
- Active display control
- One touch cook program
- Cook to perfection

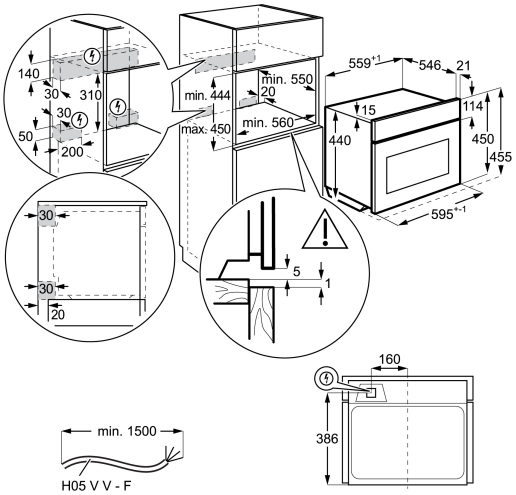

IMPORTANT
These dimensions are a guide only. All measurements are in millimetres (mm).
For complete installation instructions, refer to the manual provided with product.

Product

Total height (mm) - 455, Total width (mm) - 594, Total depth (mm) - 567

Trim

Trim height (mm) - 450, Trim width (mm) - 560, Trim depth (mm) - 550